KAF-4320

2084 (H) x 2085 (V) Full Frame CCD Image Sensor

ON Semiconductor®

www.onsemi.com

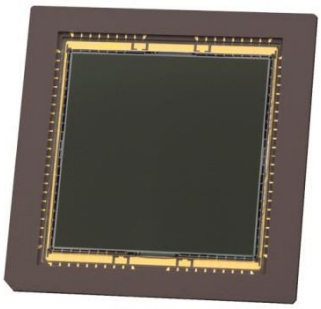

Figure 1. KAF−4320 Full Frame CCD Image Sensor

Description

The KAF−4320 Image Sensor is a high performance monochrome area CCD (charge-coupled device) image sensor designed for a wide range of image sensing applications.

The sensor incorporates true two-phase CCD technology, simplifying the support circuits required to drive the sensor as well as reducing dark current without compromising charge capacity. The sensor also utilizes the TRUESENSE Transparent Gate Electrode to improve sensitivity compared to the use of a standard front side illuminated polysilicon electrode.

The full imaging array is read out of four outputs, each of which is driven by a low impedance two stage source follower that provides a high conversion gain. This combination enables low noise at a net readout rate of 12 MHz (3 MHz per output).

Table 1. GENERAL SPECIFICATIONS

Parameter	Typical Value
Architecture	Full Frame CCD
Total Number of Pixels	2092 (H) × 2093 (V)
Number of Active Pixels	2084 (H) × 2085 (V) = approx. 4.3 Mp
Pixel Size	24 μm (H) × 24 μm (V)
Active Image Size	50.02 mm (H) × 50.02 mm (V) 70.7 mm (Diagonal) 645 Optical Format
Die Size	52.3 mm (H) × 52.7 mm (V)
Output Sensitivity	10 μV/e$^-$
Saturation Signal	500,000 electrons
Readout Noise	20 electrons (3 MHz)
Outputs	4
Dark Current	< 15 pA/cm^2
Dark Current Doubling Temperature	6.4°C
Dynamic Range	20,000 : 1
Blooming Suppression	None
Maximum Date Rate	3 MHz
Package	PGA Package
Cover Glass	Clear

NOTE: Parameters above are specified at T = 25°C unless otherwise noted.

Features

- True Two Phase Full Frame Architecture
- TRUESENSE Transparent Gate Electrode for High Sensitivity

Applications

- Medical Imaging
- Scientific Imaging

ORDERING INFORMATION

See detailed ordering and shipping information on page 2 of this data sheet.

April, 2015 − Rev. 2

Publication Order Number:
KAF−4320/D

ORDERING INFORMATION

Table 2. ORDERING INFORMATION − KAF−4320 IMAGE SENSOR

Part Number	Description	Marking Code
KAF−4320−AAA−JP−B1	Monochrome, No Microlens, PGA Package, Taped Clear Cover Glass (No Coatings), Grade 1	KAF−4320−AAA Lot Number
KAF−4320−AAA−JP−B2	Monochrome, No Microlens, PGA Package, Taped Clear Cover Glass (No Coatings), Grade 2	
KAF−4320−AAA−JP−AE	Monochrome, No Microlens, PGA Package, Taped Clear Cover Glass (No Coatings), Engineering Sample	

Table 3. ORDERING INFORMATION − EVALUATION SUPPORT

Part Number	Description
KAF−4320−16−3−A−EVK	Evaluation Board (Complete Kit)

See the ON Semiconductor *Device Nomenclature* document (TND310/D) for a full description of the naming convention used for image sensors. For reference documentation, including information on evaluation kits, please visit our web site at www.onsemi.com.

DEVICE DESCRIPTION

Architecture

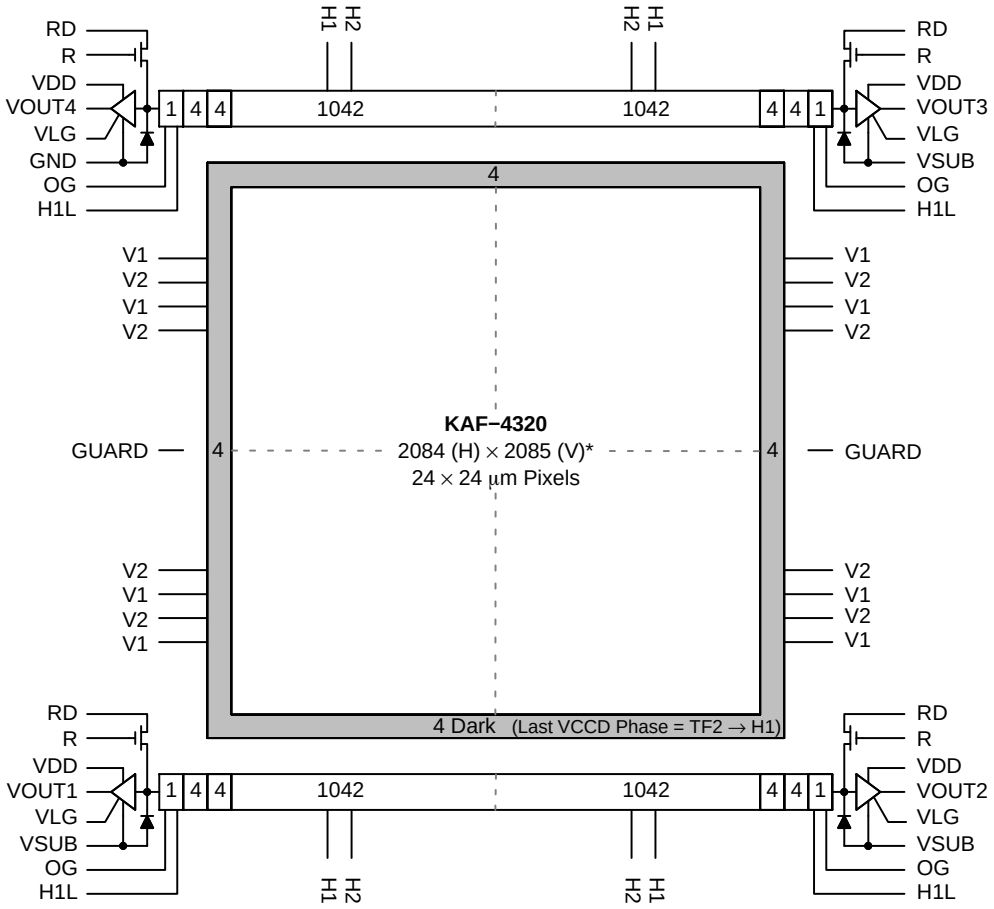

*The center row is predominately a 24 μm × 25 μm polysilicon pixel that splits evenly into each half of the array. Thus, each quadrant will consist of 1046 (H) × 1047 (V) rows where the last row will contain roughly half the signal.

Figure 2. Block Diagram

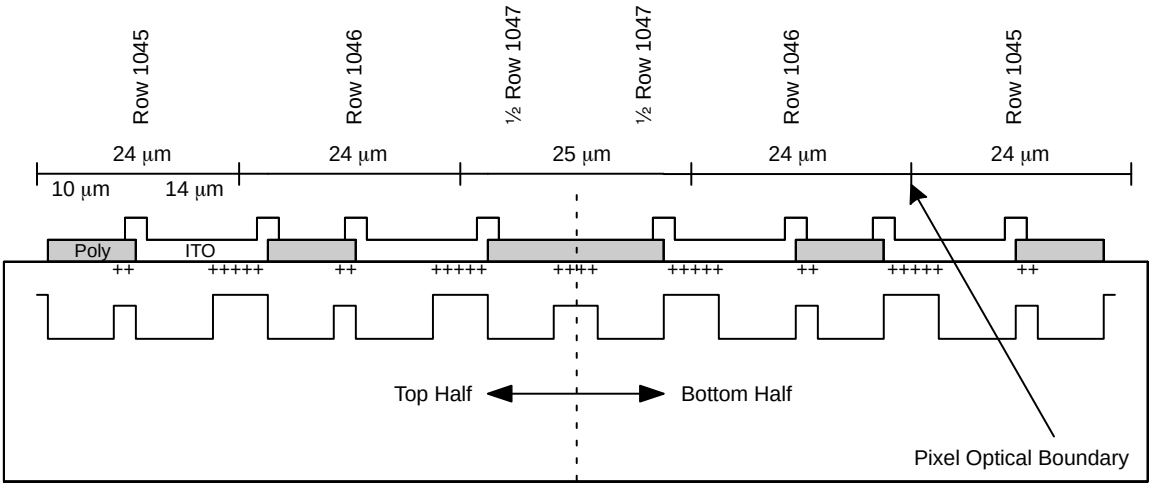

Figure 3. Horizontal Seam Cross-Section

Image Acquisition

An electronic representation of an image is formed when incident photons falling on the sensor plane create electron-hole pairs within the sensor. These photon induced electrons are collected locally by the formation of potential wells at each photogate or pixel site. The number of electrons collected is linearly dependent on light level and exposure time and non-linearly dependent on wavelength. When the pixel's capacity is reached, excess electrons will leak into the adjacent pixels within the same column. This is termed blooming. During the integration period, the ϕV1 and ϕV2 register clocks are held at a constant (low) level. See Figure 17.

Charge Transport

Referring again to Figure 17, the integrated charge from each photogate is transported to the output using a two-step process. Each line (row) of charge is first transported from the vertical CCD to the horizontal CCD register using the ϕV1 and ϕV2 register clocks. The horizontal CCD is presented a new line on the falling edge of ϕV2 while ϕH1 is held high. The horizontal CCD then transports each line, pixel by pixel, to the output structure by alternately clocking the ϕH1 and ϕH2 pins in a complementary fashion. On each falling edge of ϕH1L a new charge packet is transferred onto a floating diffusion and sensed by the output amplifier.

Output Structure

Charge presented to the floating diffusion is converted into a voltage and current amplified in order to drive off-chip loads. The resulting voltage change seen at the output is linearly related to the amount of charge placed on the floating diffusion. Once the signal has been sampled by the system electronics, the reset gate (ϕR) is clocked to remove the signal and the floating diffusion is reset to the potential applied by V_{RD}. (See Figure 4). More signal at the floating diffusion reduces the voltage seen at the output pin. In order to activate the output structure, an off-chip load must be added to the VOUT pin of the device such as shown in Figure 6.

If charge binning is desired, the charge can be combined at the output node or it can be combined in the ϕH1L gate and then presented to the output node.

Dark Reference Pixels

There are 4 light shielded pixels at the beginning of each line. There are 4 dark lines at the start of every frame and 4 dark lines at the end of each frame. Since there are outputs at each of the four corners, the light shield will affect the beginning of each line from each output, and for the first four lines from each of the outputs. Under normal circumstances, these pixels do not respond to light. However, dark reference pixels in close proximity to an active pixel can scavenge signal depending on light intensity and wavelength and therefore will not represent the true dark signal.

Dummy Pixels

Within the horizontal shift register are 4−1/2 leading pixels that are not associated with a column of pixels within the vertical register. These pixels contain only horizontal shift register dark current signal and do not respond to light. A few leading dummy pixels may scavenge false signal depending on operating conditions.

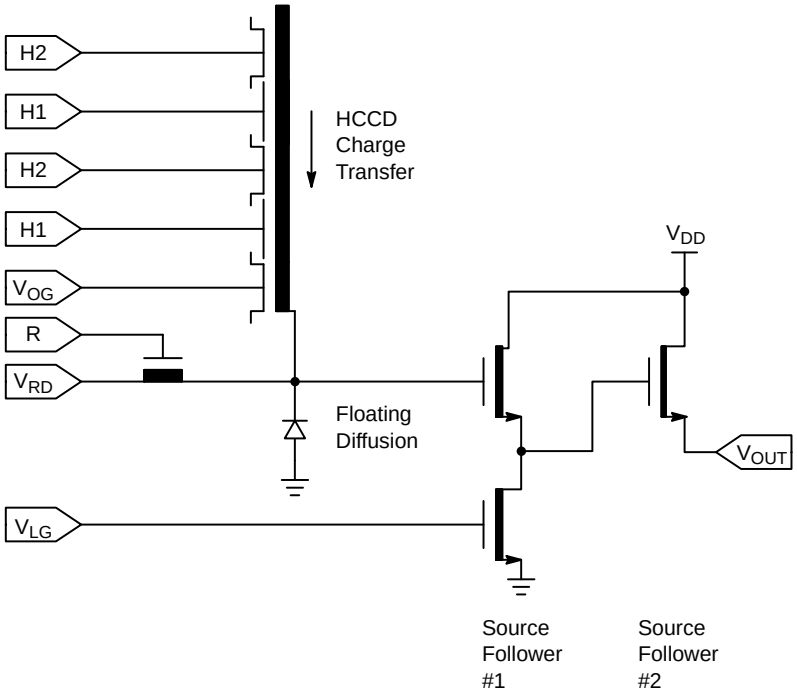

Figure 4. Output Architecture

Physical Description

Pin Description and Device Orientation

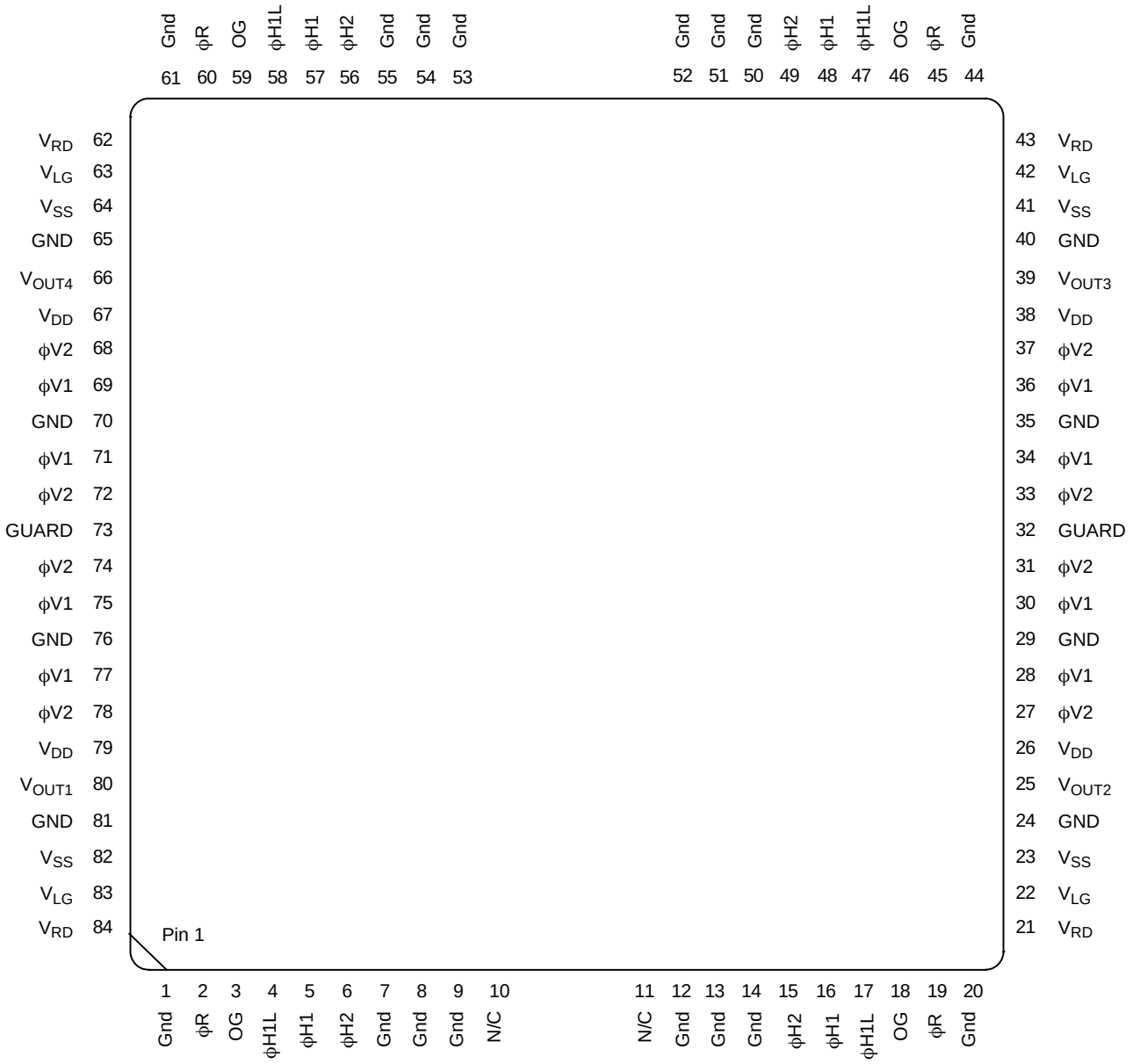

Figure 5. Pinout Diagram

Table 4. PIN DESCRIPTION

Pin	Name	Description
1	GND	Substrate (Ground)
2	ϕR	Reset Clock
3	VOG	Output Gate Bias
4	ϕH1L	Horizontal CCD Clock − Last Phase
5	ϕH1	Horizontal CCD Clock − Phase 1
6	ϕH2	Horizontal CCD Clock − Phase 2
7	GND	Substrate (Ground)
8	GND	Substrate (Ground)
9	GND	Substrate (Ground)
10	N/C	No Connect
11	N/C	No Connect
12	GND	Substrate (Ground)
13	GND	Substrate (Ground)
14	GND	Substrate (Ground)
15	ϕH2	Horizontal CCD Clock − Phase 2
16	ϕH1	Horizontal CCD Clock − Phase 1
17	ϕH1L	Horizontal CCD Clock − Last Phase
18	VOG	Output Gate Bias
19	ϕR	Reset Clock
20	GND	Substrate (Ground)
21	VRD	Reset Drain
22	VLG	Source Follower Load Gate Bias
23	VSS	Amplifier Supply Return
24	GND	Substrate (Ground)
25	VOUT2	Amplifier Output
26	VDD	Amplifier Supply
27	ϕV2	Vertical CCD Clock − Phase 2
28	ϕV1	Vertical CCD Clock − Phase 1
29	GND	Substrate (Ground)
30	ϕV1	Vertical CCD Clock − Phase 1
31	ϕV2	Vertical CCD Clock − Phase 2
32	GUARD	Guard Ring
33	ϕV2	Vertical CCD Clock − Phase 2
34	ϕV1	Vertical CCD Clock − Phase 1
35	GND	Substrate (Ground)
36	ϕV1	Vertical CCD Clock − Phase 1
37	ϕV2	Vertical CCD Clock − Phase 2
38	VDD	Amplifier Supply
39	VOUT3	Amplifier Output
40	GND	Substrate (Ground)
41	VSS	Amplifier Supply Return
42	VLG	Source Follower Load Gate Bias
43	VRD	Reset Drain
44	GND	Substrate (Ground)
45	ϕR	Reset Clock
46	VOG	Output Gate Bias
47	ϕH1L	Horizontal CCD Clock − Last Phase
48	ϕH1	Horizontal CCD Clock − Phase 1
49	ϕH2	Horizontal CCD Clock − Phase 2
50	GND	Substrate (Ground)
51	GND	Substrate (Ground)
52	GND	Substrate (Ground)
53	GND	Substrate (Ground)
54	GND	Substrate (Ground)
55	GND	Substrate (Ground)
56	ϕH2	Horizontal CCD Clock − Phase 2
57	ϕH1	Horizontal CCD Clock − Phase 1
58	ϕH1L	Horizontal CCD Clock − Last Phase
59	VOG	Output Gate Bias
60	ϕR	Reset Clock
61	GND	Substrate (Ground)
62	VRD	Reset Drain
63	VLG	Source Follower Load Gate Bias
64	VSS	Amplifier Supply Return
65	GND	Substrate (Ground)
66	VOUT4	Amplifier Output
67	VDD	Amplifier Supply
68	ϕV2	Vertical CCD Clock − Phase 2
69	ϕV1	Vertical CCD Clock − Phase 1
70	GND	Substrate (Ground)
71	ϕV1	Vertical CCD Clock − Phase 1
72	ϕV2	Vertical CCD Clock − Phase 2
73	GUARD	Guard Ring
74	ϕV2	Vertical CCD Clock − Phase 2
75	ϕV1	Vertical CCD Clock − Phase 1
76	GND	Substrate (Ground)
77	ϕV1	Vertical CCD Clock − Phase 1
78	ϕV2	Vertical CCD Clock − Phase 2
79	VDD	Amplifier Supply
80	VOUT1	Amplifier Output
81	GND	Substrate (Ground)
82	VSS	Amplifier Supply Return
83	VLG	Source Follower Load Gate Bias
84	VRD	Reset Drain

1. Like named pins (e.g. VSS) should be connected to the same supply.

IMAGING PERFORMANCE

Electro-Optical Specifications

All values measured at 25°C, and nominal operating conditions. These parameters exclude defective pixels.

Table 5. SPECIFICATIONS

Description	Symbol	Min.	Nom.	Max.	Units	Notes	Verification Plan
Saturation Signal Vertical CCD Capacity Horizontal CCD Capacity Output Node Capacity	N_{SAT}	 – – 500,000	 650,000 850,000 550,000	 – – –	e^-/pix	1	Design[10]
Quantum Efficiency (see Figure 6)		–	–	–			Design[10]
Photoresponse Non-Linearity	PRNL	–	< 1.0	2.0	%	2	Design[10]
Photoresponse Non-Uniformity	PRNU	–	0.8	2.0	%	3	Design[10]
Channel to Channel Gain Difference	G	–	0.2	5	%	8	Die[9]
Dark Signal	J_{DARK}	–	2,507	54,015	e^-/pix/sec	4	Die[9]
Dark Signal Doubling Temperature		–	6.3	7	°C		Design[10]
Dark Signal Non-Uniformity	DSNU	–	300	540	e^-/pix/sec	5	Die[9]
Dynamic Range	DR	86	87.5	–	dB	6	Design[10]
Output Amplifier DC Offset	V_{ODC}	$V_{RD} - 4$	$V_{RD} - 3$	$V_{RD} - 2$	V		Die[9]
Output Amplifier Sensitivity	V_{OUT}/N_e^-	9	10	11	$\mu V/e^-$		Design[10]
Output Amplifier Output Impedance	Z_{OUT}	–	150	–	Ω		Die[9]
Noise Floor	n_e^-	–	17	24	electrons	7	Design[10]

1. The maximum output video amplitude limits the charge capacity and dynamic range. The maximum charge capacity is determined from a photon transfer measurement and is defined as the point where the mean-variance fails to demonstrate the theoretical behavior.
2. Worst case deviation from straight line fit, between 0.1% and 95% of V_{SAT}.
3. One Sigma deviation of a 1042 × 1042 sample (data from one output) when the CCD is illuminated uniformly at half of saturation, excluding defective pixels. [100 · (Std Deviation / Average)]
4. Average of all pixels with no illumination at 25°C.
5. Average dark signal of any of 16 × 16 blocks within the sensor (each block is 130 × 130 pixels).
6. The dynamic range limited by the noise of the output amplifier (i.e. at temperatures less than –10°C), pixel frequency = 3 MHz, and bandwidth = 10 MHz.
7. Noise floor of the CCD amplifier assuming correlated double sampling, pixel frequency = 3 MHz, and bandwidth = 10 MHz.
8. ΔG = abs (100 · (1 – [response of a channel] / [average response of all four channels])). The specified gain difference is the combination of all the gain errors on the CCD sensor and the analog signal processing in the test system.
9. A parameter that is measured on every sensor during production testing.
10. A parameter that is quantified during the design verification activity.

TYPICAL PERFORMANCE CURVES

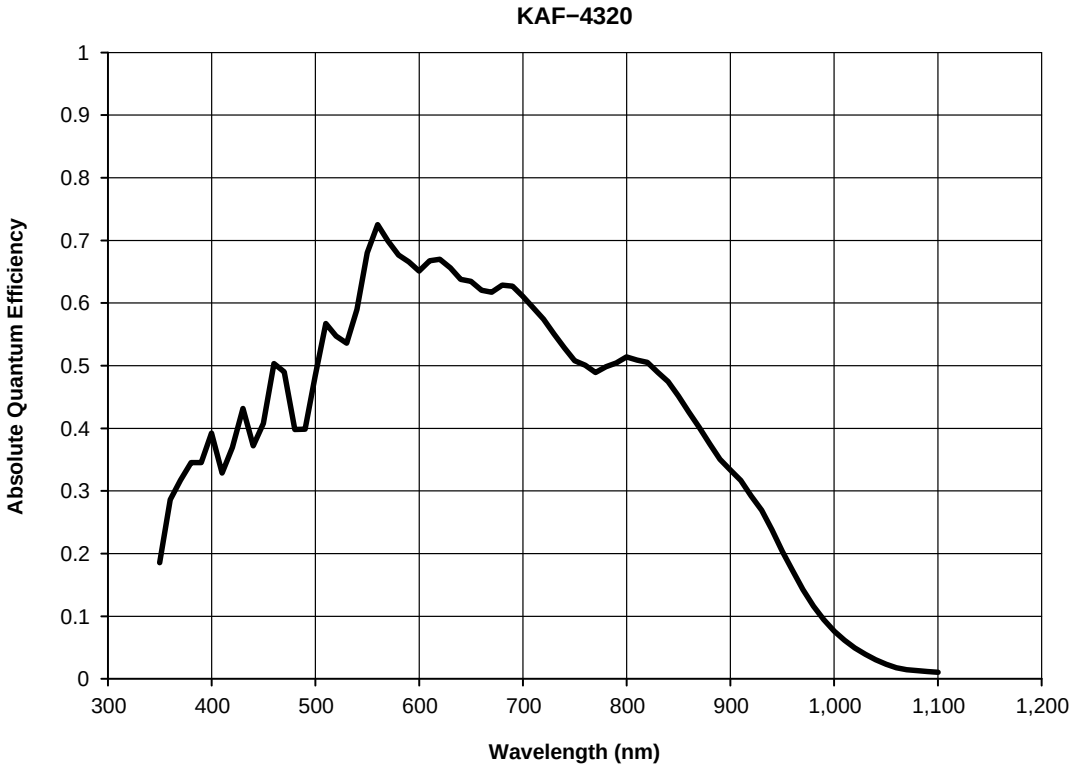

Figure 6. Typical Spectral Response

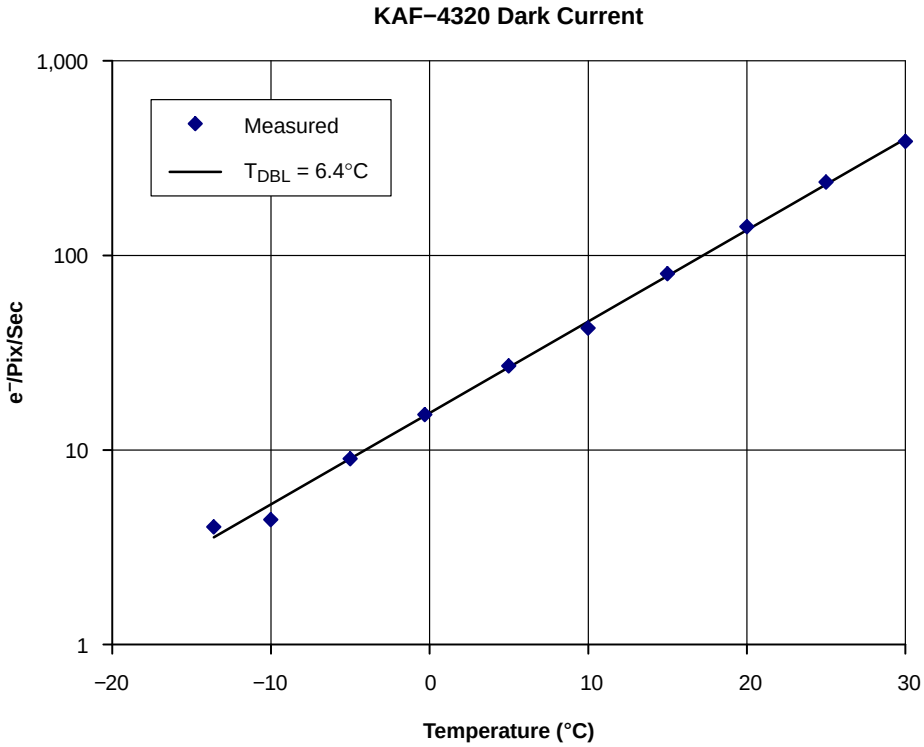

Figure 7. Dark Current Temperature Dependence

Linearity

Figure 8 shows a typical result from measuring the signal response as a function of integration time, while the illumination level is constant. The data is fit in log space to give equal weighting between low and high signal levels. A perfectly linear system would have a slope of 1.00 in log space. The slope in the fit is allowed to deviate from the ideal by a small amount. Typical values of the slope are between 1.00 and 1.02. The deviation from linear is defined as:

$$\%\ \text{Dev} = \left| 100 \cdot \frac{[\text{Measured Value} - \text{Fit Value}]}{\text{Fit Value}} \right|$$

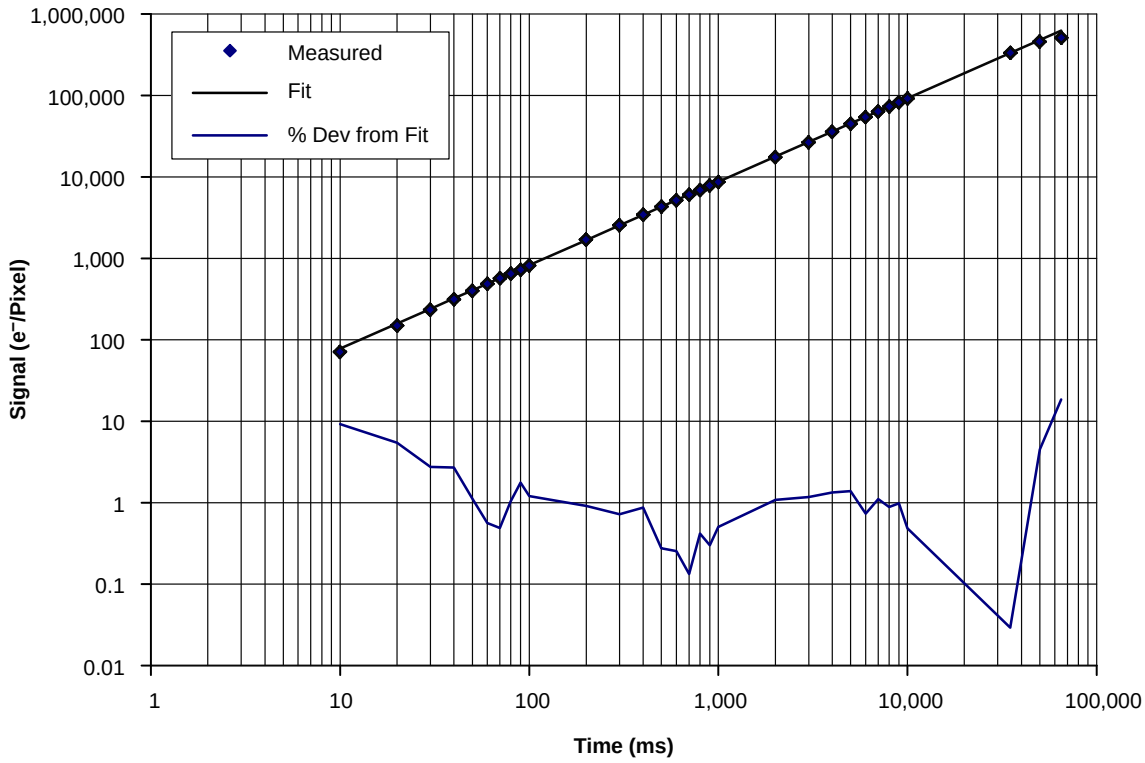

Figure 8. Linearity

CCD Output

The following figures show typical CCD video at the output of the CCD and at the input of the analog to digital converter (A/D) in the test system. Bandwidth limiting is applied at the A/D input to minimize the noise floor.

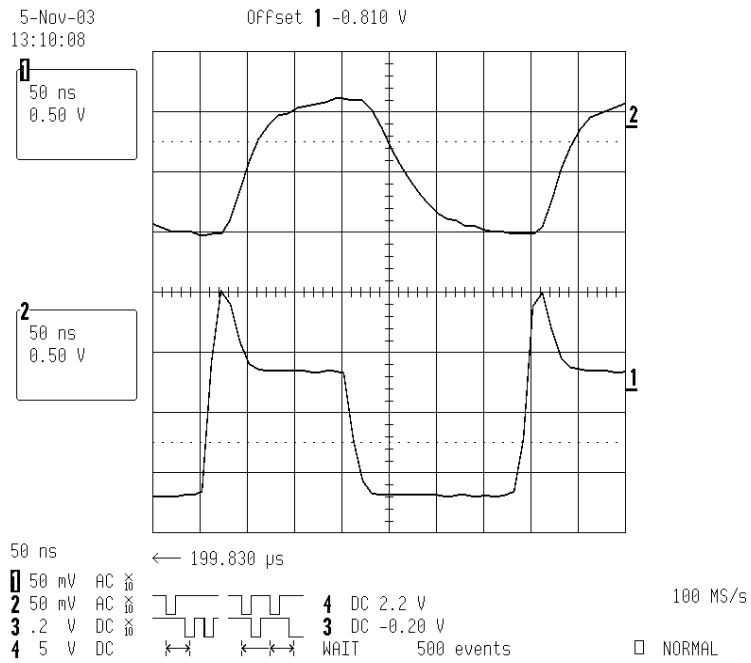

Figure 9. CCD Output: Small Signal

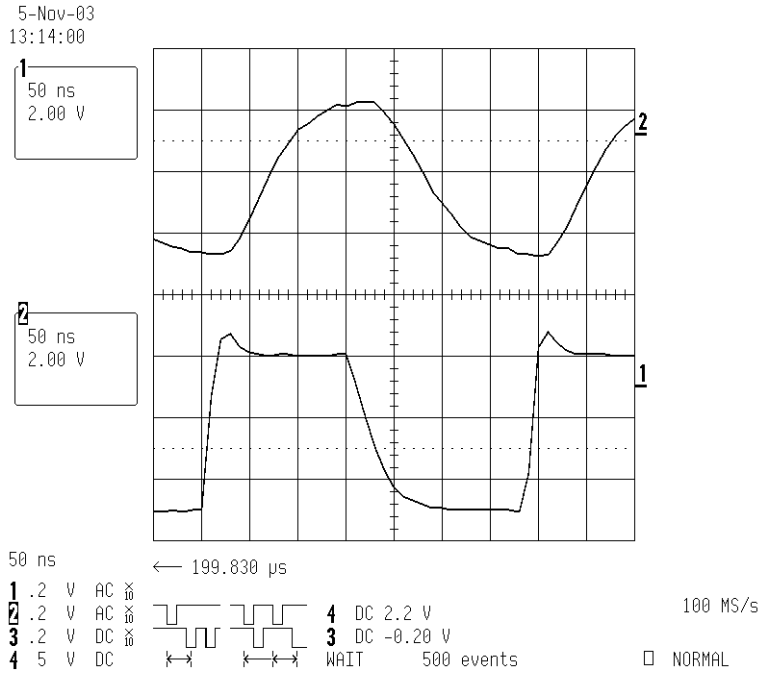

Figure 10. CCD Output: Large Signal

Noise

The CCD amplifier noise floor, the CCD dark current during readout, and other system components such as the analog-digital converter dictate the total system noise.

CCD Amplifier

The noise contributed by the output amplifier is determined from the amplifier's noise power spectrum, the system bandwidth, and any other analog processing. Correlated double sampling is a standard analog processing technique used with CCDs and it is assumed that it is used for all of the rest of the calculations and results in this document.

System Noise

The total noise will be the combination of the CCD noise and the noise contributed by other components in the processing circuitry. The total noise, dominated by the CCD and the A/D converter is also shown in Figure 11. The measured vales were obtained using a system that employed Datel 16 bit analog to digital converters, the ADS931 and ADS933. The system noise obtained matched the Datel specifications exactly and was similar and slightly lower than the CCD noise contribution. The table below shows the results and good agreement between the expected and measured results for the CCD alone and the CCD in the system at 1 MHz and 3 MHz. The values in the table are in electrons referred to the CCD amplifier input.

Table 6.

Frequency	CCD Measured Noise	CCD + System Datel ADS93x Measured
1.00E+06	12	16.2
3.00E+06	17.3	22.6

Temperature Dependance of the Noise Floor

The temperature dependence of the noise floor is dictated primarily by the dark current generated during the readout time for the CCD. Figure 12 and Figure 13 show the expected dynamic range as a function of temperature for two pixel rates, 3 MHz and 1 MHz. The dynamic range was calculated using the measured amplifier and system noise values, the expected dark current performance, and the saturation signal. At 25°C, the dark current shot noise can contribute from 12 to 50 electrons and dominate the noise floor. The maximum dynamic range can be achieved at temperatures < −10°C for these read out frequencies.

Noise vs. Frequency

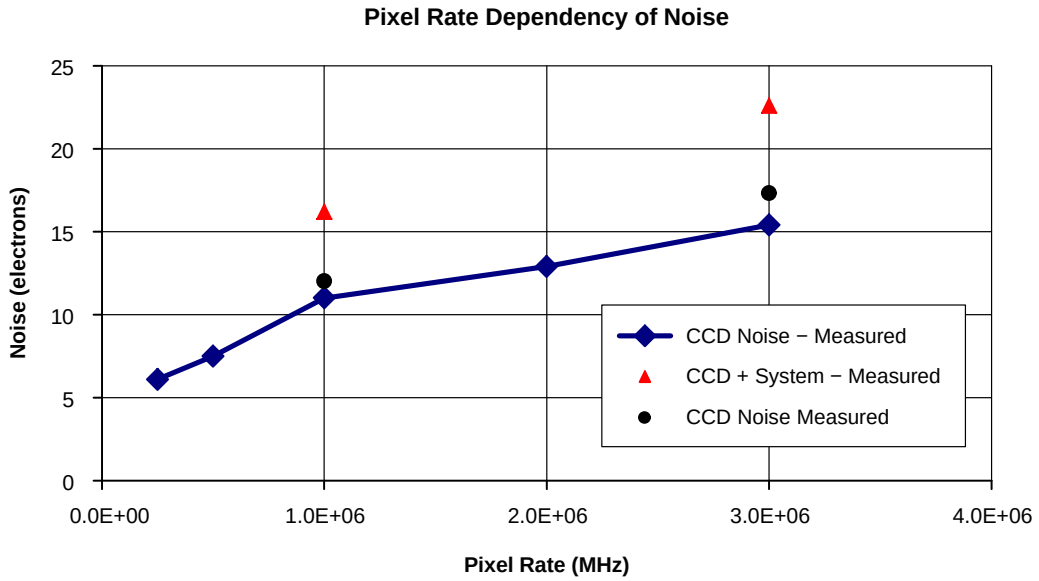

Figure 11. Noise vs. Pixel Rate

Performance vs. Temperature

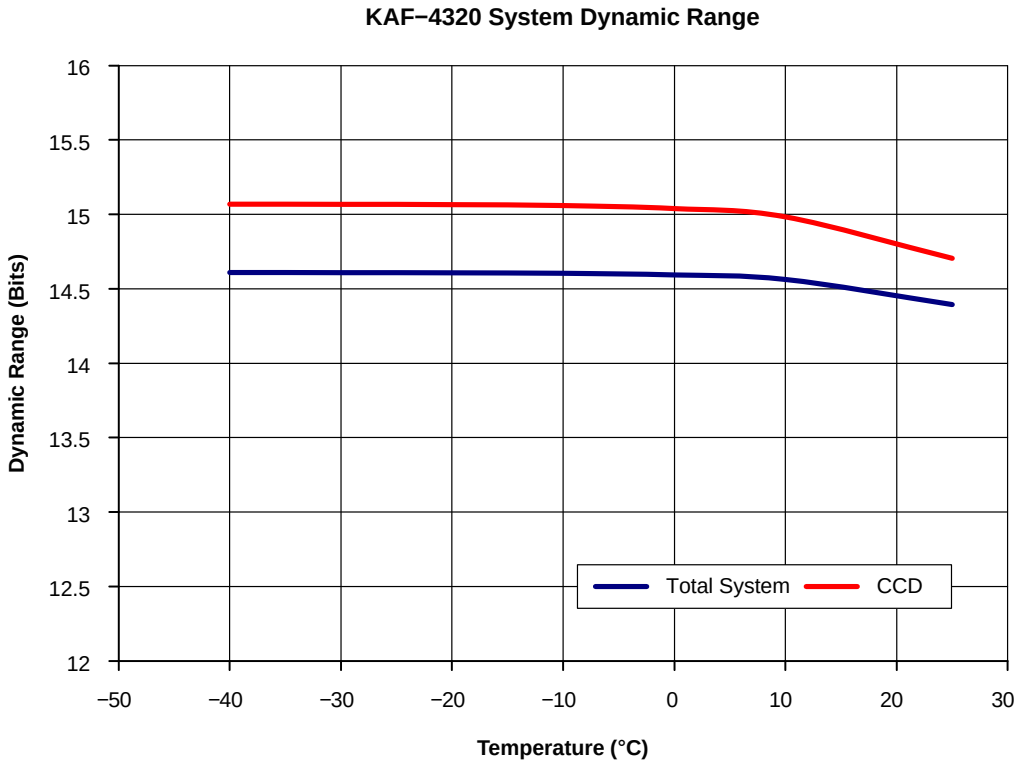

Total System Noise: CCD Readout Dark Current + CCD Amplifier + A/D Converter
(Datel 933 16 Bit Converter)

Figure 12. Noise vs. Temperature − 3 MHz Pixel Rate

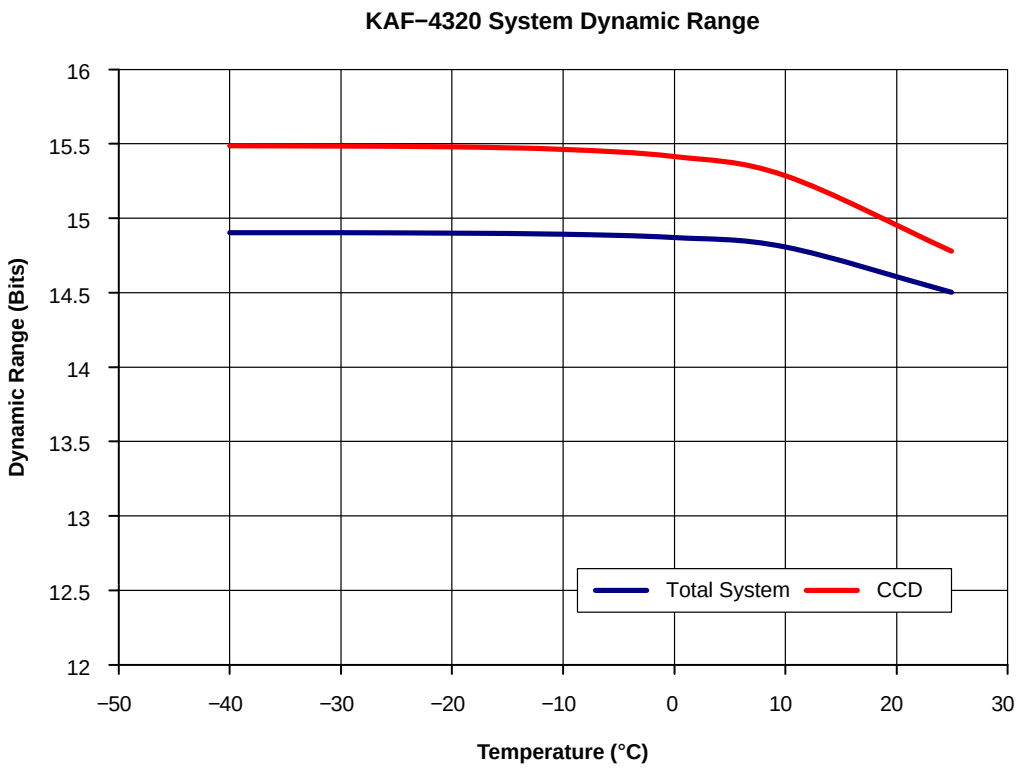

Total System Noise: CCD Readout Dark Current + CCD Amplifier + A/D Converter
(Datel 933 16 Bit Converter)

Figure 13. Noise vs. Temperature − 1 MHz Pixel Rate

DEFECT DEFINITIONS

Table 7. SPECIFICATIONS (Cosmetic tests performed at T = 25°C)

Grade	Point Defects	Cluster Defects	Columns	Double Columns
C1	< 50	< 20	0	0
C2	< 100	< 20	< 4	0

Point Defects

Dark: A pixel which deviates by more than 6% from neighboring pixels when illuminated to 70% of saturation.

Bright: A pixel with a dark current greater than 5,000 e^-/pixel/sec at 25°C.

Cluster Defect

A grouping of not more than 5 adjacent point defects.

Column Defect

A grouping of > 5 contiguous point defects along a single column.

A column containing a pixel with dark current > 100,000 e^-/pix/sec (Bright column).

A column that does not meet the minimum vertical CCD charge capacity (Low charge capacity column).

A column that loses > 3,500 e^- under 2 ke^- illumination (Trap defect).

Neighboring Pixels

The surrounding 128 × 128 pixels or ±64 columns/rows.

Defect Separation

Column and cluster defects are separated by no less than two (2) pixels in any direction (excluding single pixel defects).

Cluster defects are separated by no less than 2 pixels from other column and cluster defects.

Column defects are separated by no less than 5 pixels from other column defects.

OPERATION

Table 8. ABSOLUTE MAXIMUM RATINGS

Description	Symbol	Minimum	Maximum	Units	Notes
Diode Pin Voltages	V_{DIODE}	0	25	V	1, 2
Gate Pin Voltages − Type 1	V_{GATE1}	−17	17	V	1, 3, 6
Gate Pin Voltages − Type 2	V_{GATE2}	0	17	V	1, 4, 6
Output Bias Current	I_{OUT}	−	−10	mA	5
Output Load Capacitance	C_{LOAD}	−	15	pF	5

Stresses exceeding those listed in the Maximum Ratings table may damage the device. If any of these limits are exceeded, device functionality should not be assumed, damage may occur and reliability may be affected.

1. Referenced to pin VSUB or between each pin in this group.
2. Includes pins: VRD, VDD, VSS, VOUT.
3. Includes pins: ϕV1, ϕV2, ϕH1, ϕH2, ϕH1L.
4. Includes pins: VOG, VLG, ϕR.
5. Avoid shorting output pins to ground or any low impedance source during operation.
6. This sensor contains gate protection circuits to provide protection against ESD events. The circuits will turn on when greater than 18 volts appears between any two gate pins. Permanent damage can result if excessive current is allowed to flow under these conditions.

Equivalent Input Circuits

Many of the pins contain a form of gate protection to prevent damage from electrostatic discharge. These take the form of zener diodes that prevent the voltage differences between gates from becoming large enough to damage the sensor. Isolated gates such as ϕR and V_{LG} require only protection between the gate and the sensor substrate.

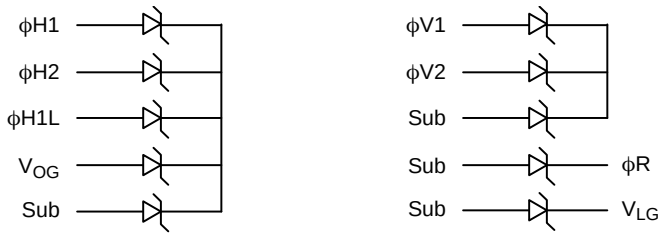

Figure 14. Equivalent Input Circuits

Table 9. DC BIAS OPERATING CONDITIONS

Description	Symbol	Minimum	Nominal	Maximum	Units	Maximum DC Current (mA)	Notes
Reset Drain	V_{RD}	−	18.5	−	V	0.01	2
Output Amplifier Return	V_{SS}	−	2.0	−	V	1	3
Output Amplifier Supply	V_{DD}	−	21	−	V	I_{OUT}	2
Substrate	GND	−	0	−	V	−	
Output Gate	V_{OG}	−	0	−	V	0.01	3
Output Amplifier Load Gate	V_{LG}	V_{SS}	V_{SS} + 1.0	V_{SS} + 1.2	V	0.01	
Guard Ring	GUARD	−	10	−	V	−	3
Amplifier Output Current	I_{OUT}	−	−5	−10	mA	−	1

1. An output load sink must be applied to V_{OUT} to provide a constant current source and activate the output amplifier − see Figure 15.
2. Voltage tolerance is 2% (actual voltage should be nominal ± tolerance).
3. Voltage tolerance is 5% (actual voltage should be nominal ± tolerance).

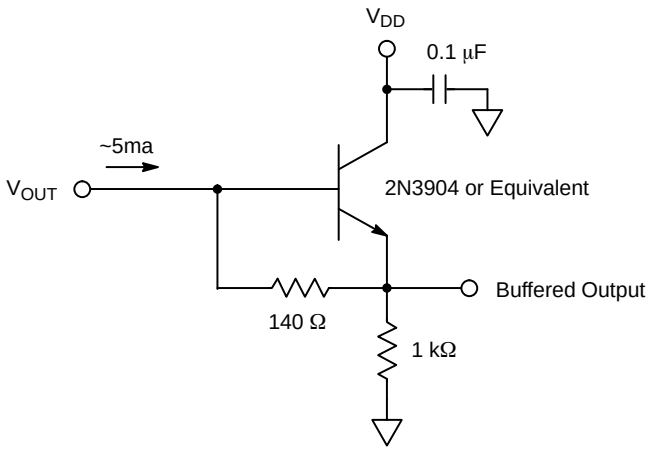

Figure 15. Example Output Structure Load Diagram

AC Operating Conditions

Table 10. CLOCK LEVELS

Description	Symbol	Level	Nominal	Units	Effective Capacitance	Notes
Vertical CCD Clock − Phase 1	ϕV1	Low	−8.0	V	75 nF (Each of ϕV1 Pins 30, 34, 71, 75)	4, 5
		Clock Amplitude	8.0			
Vertical CCD Clock − Phase 2	ϕV2	Low	−8.0	V	75 nF (Each of ϕV2 Pins 31, 33, 72, 74)	4, 5
		Clock Amplitude	8.0			
Horizontal CCD Clock − Phase 1	ϕH1	Low	0	V	150 nF (Each of ϕH1 Pins 5, 16, 48, 57)	3, 6
		Clock Amplitude	10.0			
Horizontal CCD Clock − Last Gate	ϕH1L	Low	−3.0	V	10 pF	3
		Clock Amplitude	10.0			
Horizontal CCD Clock − Phase 2	ϕH2	Low	−3.0	V	100 pF	3, 7
		Clock Amplitude	10.0			
Reset Clock	ϕR	Low	2.0	V	5 pF	3
		Clock Amplitude	12.0			

1. All pins draw less than 10 μA DC current.
2. Capacitance values relative to V_{SUB}.
3. Voltage tolerance is 2% (actual voltage should be nominal ± tolerance).
4. Voltage tolerance is 5% (actual voltage should be nominal ± tolerance).
5. Total clock capacitance is 4 · 75 nF = 300 nF.
6. Total clock capacitance is 4 · 150 pF = 600 pF.
7. Total clock capacitance is 4 · 100 pF = 400 pF.

AC Timing Conditions

Table 11. AC TIMING CONDITIONS

Description	Symbol	Minimum	Nominal	Maximum	Units	Notes
ϕH1, ϕH2 Clock Frequency	f_H	−	3	3	MHz	1, 2, 3
Pixel Period (1 Count)	t_e	333	333	−	ns	
ϕH1, ϕH2 Set-up Time	$t_{\phi HS}$	10	10	−	μs	
ϕV1, ϕV2 Clock Pulse Width	$t_{\phi V}$	30	30	−	μs	2
Reset Clock Pulse Width	$t_{\phi R}$	−	20	−	ns	4
Readout Time	$t_{READOUT}$	470.3	470.3	−	ms	5
Integration Time	t_{INT}	−	−	−		6
Line Time	t_{LINE}	449.6	449.6	−	μs	7

1. 50% duty cycle values.
2. CTE may degrade above the nominal frequency.
3. Rise and fall times (10/90% levels) should be limited to 5−10% of clock period. Crossover of register clocks should be between 40−60% of amplitude.
4. ϕR should be clocked continuously.
5. $t_{READOUT} = (1046 \cdot t_{LINE})$
6. Integration time (t_{INT}) is user specified. Longer integration times will degrade noise performance due to dark signal fixed pattern and shot noise.
7. $t_{LINE} = (3 \cdot t_{\phi V}) + t_{\phi HS} + (1050 \cdot t_e)$.
8. When combining the image from the upper half of the device with that from the lower half, line 1047 from each must be added together and gained (approx. 1.2X) to match the other 1046 lines.

Pixel Rate Clock Waveforms

For best performance, the horizontal clocks should be damped, similar to those shown in Figure 16. The clocks in this figure were generated using a 50 Ω output impedance clock driver. Excessively fast clocks can result in a higher noise floor.

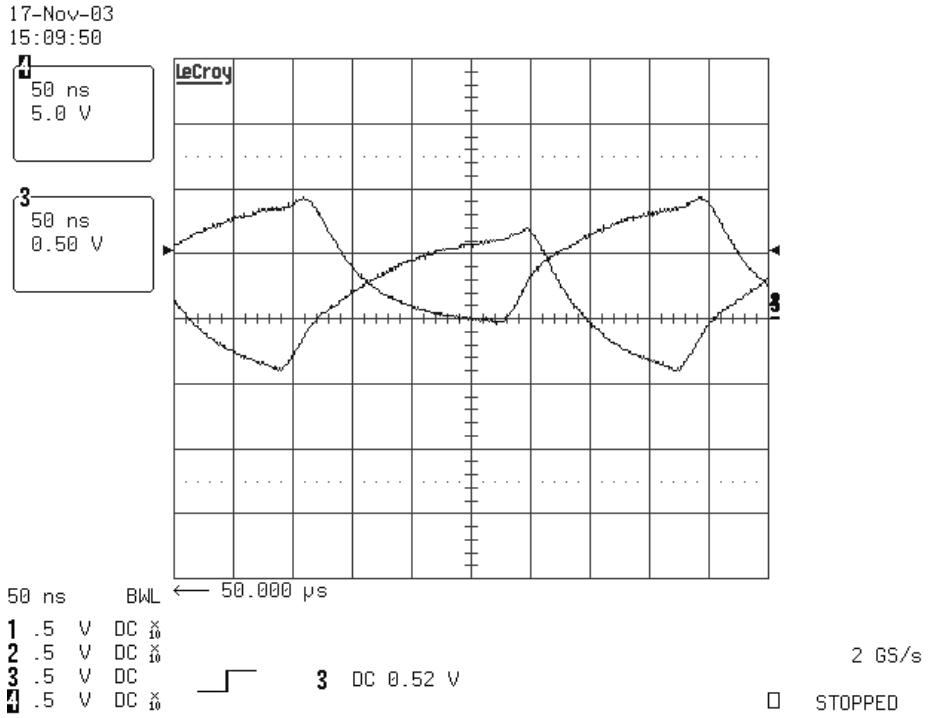

Figure 16. Clock Example

TIMING

Normal Read Out

Frame Timing − per Quadrant (Each Output Contains One Half of the Line)

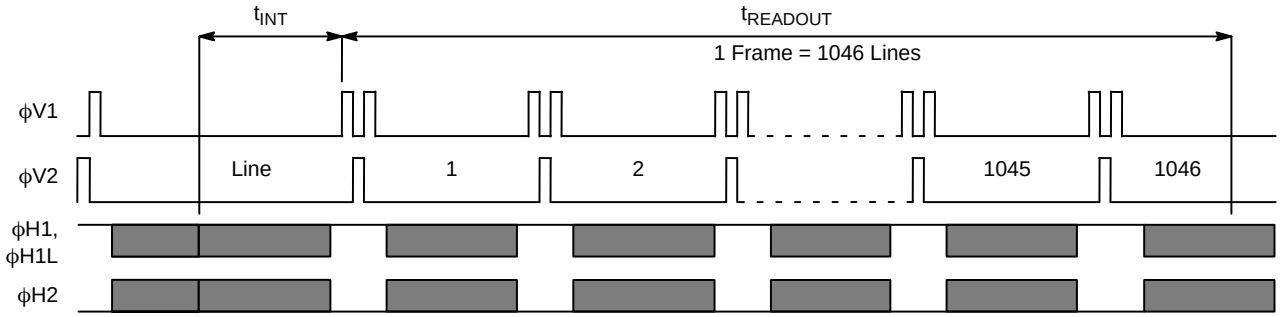

Line Timing

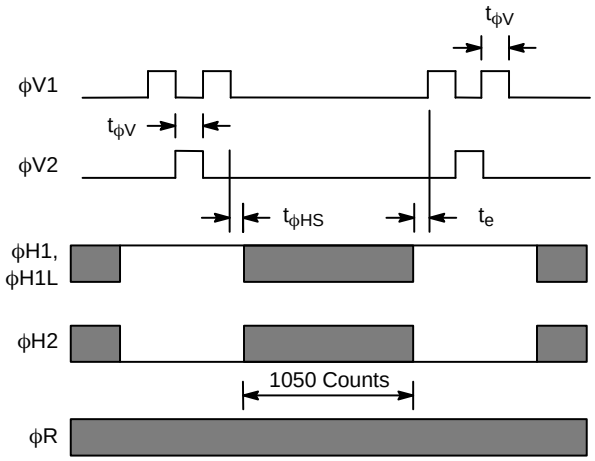

Pixel Timing

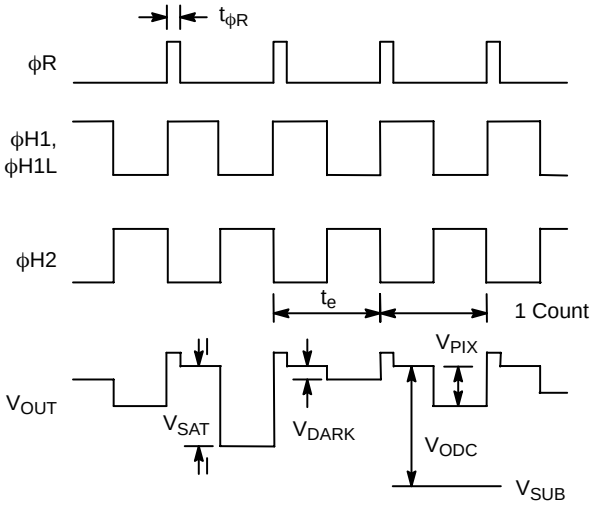

Line Content − per Quadrant (Each Output Contains One Half of the Line)

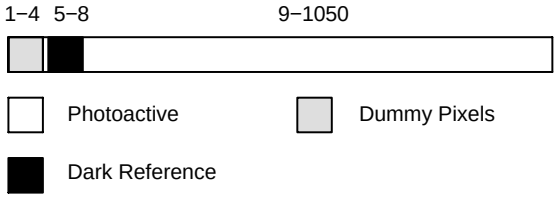

V_{SAT}	Saturated pixel video output
V_{DARK}	Video output signal in no-light situation (not zero due to J_{DARK} and H_{CLOCK} feedthrough)
V_{PIX}	Pixel video output signal level, more electrons = more positive*
V_{ODC}	Video level offset with respect to V_{SUB}
V_{SUB}	Analog ground

* See Image Acquisition section.

Figure 17. Timing Diagrams

Power Dissipation

The power dissipated by the CCD clocks is calculated using the formula:

$$\text{Power} = C \cdot V^2 \cdot f$$

Where C is the capacitance in farads, V is the clock amplitude in volts, and f is the frequency in Hz.

Amplifier Power

The power dissipated by amplifiers is calculated by Power = I · V where I is the current and V is the voltage drop on the CCD. The sensor contains two stage source followers. The first stage draws approximately 250 micro amps and the voltage drop is $V_{DD} - V_{SS}$. The second stage sources much more current, approximately 5 mA while the voltage drop on the sensor is much smaller, $V_{DD} - V_{OUT}$ where $V_{OUT} \sim V_{RD}$.

Total Power

The table below shows the power dissipated at three different pixel frequencies. For each of these cases the amplifier operating conditions are held constant so its contribution is not frequency dependent. The time for the vertical clock transfers is also held constant (90 microseconds per line) but the line time changes depending on the pixel rate.

Table 12. TOTAL POWER

Contributor	Pixel Rate			Notes
	500 kHz	1 MHz	3 MHz	
Amplifiers	120 mW	120 mW	120 mW	Total of 4 Outputs
HCCD	60 mW	120 mW	360 mW	
VCCD	62 mW	121 mW	297 mW	
Total	241 mW	361 mW	776 mW	

CCD Surface Flatness

The flatness of the die is defined as a peak-to-peak distortion in the image sensor surface. The parallelism between the image sensor surface and any of the package components is not specified or guaranteed. The non-parallelism is removed when measuring the distortion in the image sensor surface.

Table 13.

		Minimum	Nominal	Maximum	Unit
Die Flatness	Peak-to-Peak Distortion	–	8.8	12.0	microns

Some examples of profiles of some typical image sensors surfaces are shown below.

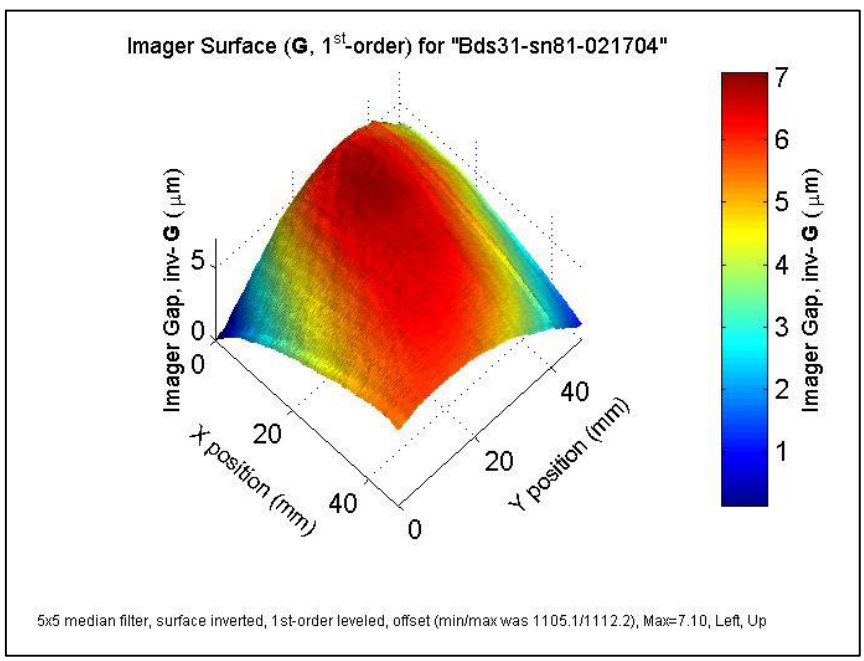

Figure 18. Die Flatness Data

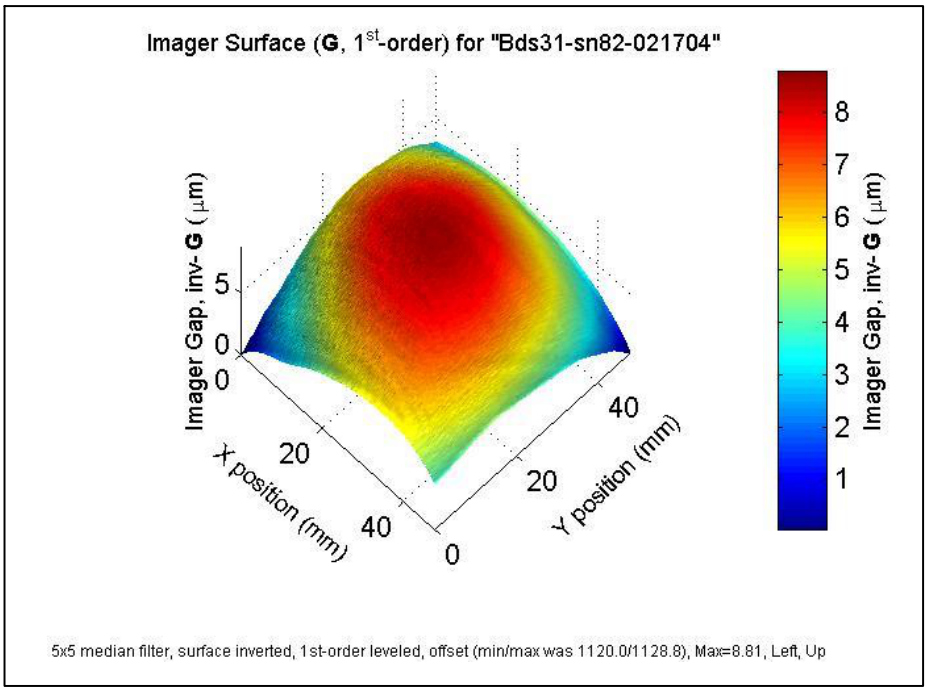

Figure 19. Die Flatness Data

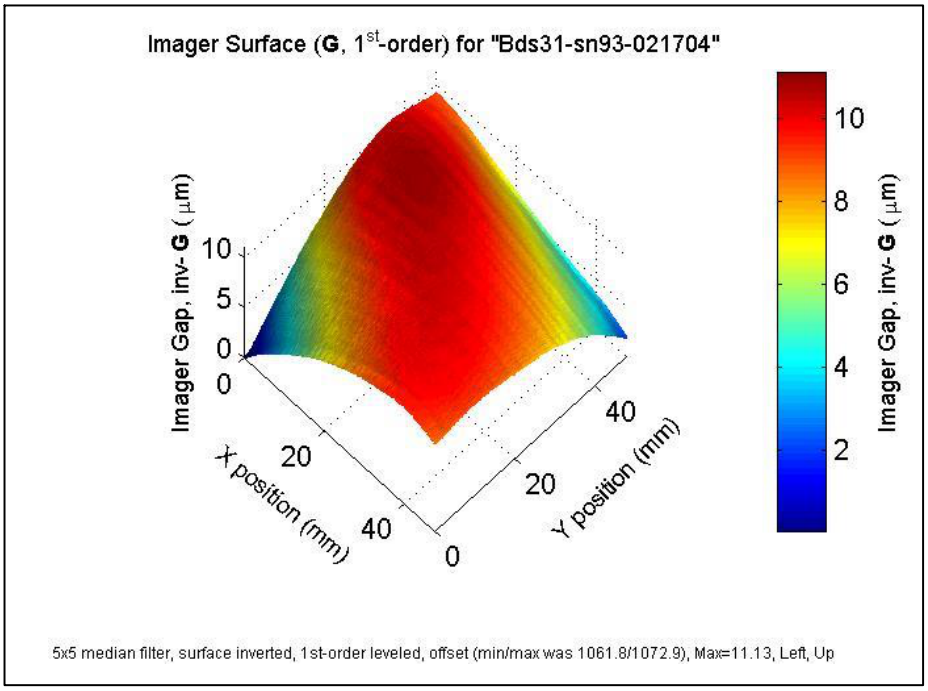

Figure 20. Die Flatness Data

STORAGE AND HANDLING

Table 14. STORAGE CONDITIONS

Description	Symbol	Minimum	Maximum	Units	Notes
Storage Temperature	T_{ST}	−100	80	°C	1
Operating Temperature	T_{OP}	−70	50	°C	

1. Image sensors with temporary cover glass should be stored at room temperature (nominally 25°C) in dry nitrogen.

For information on ESD and cover glass care and cleanliness, please download the *Image Sensor Handling and Best Practices* Application Note (AN52561/D) from www.onsemi.com.

For information on soldering recommendations, please download the Soldering and Mounting Techniques Reference Manual (SOLDERRM/D) from www.onsemi.com.

For quality and reliability information, please download the *Quality & Reliability* Handbook (HBD851/D) from www.onsemi.com.

For information on device numbering and ordering codes, please download the *Device Nomenclature* technical note (TND310/D) from www.onsemi.com.

For information on Standard terms and Conditions of Sale, please download Terms and Conditions from www.onsemi.com.

MECHANICAL INFORMATION

Completed Assembly

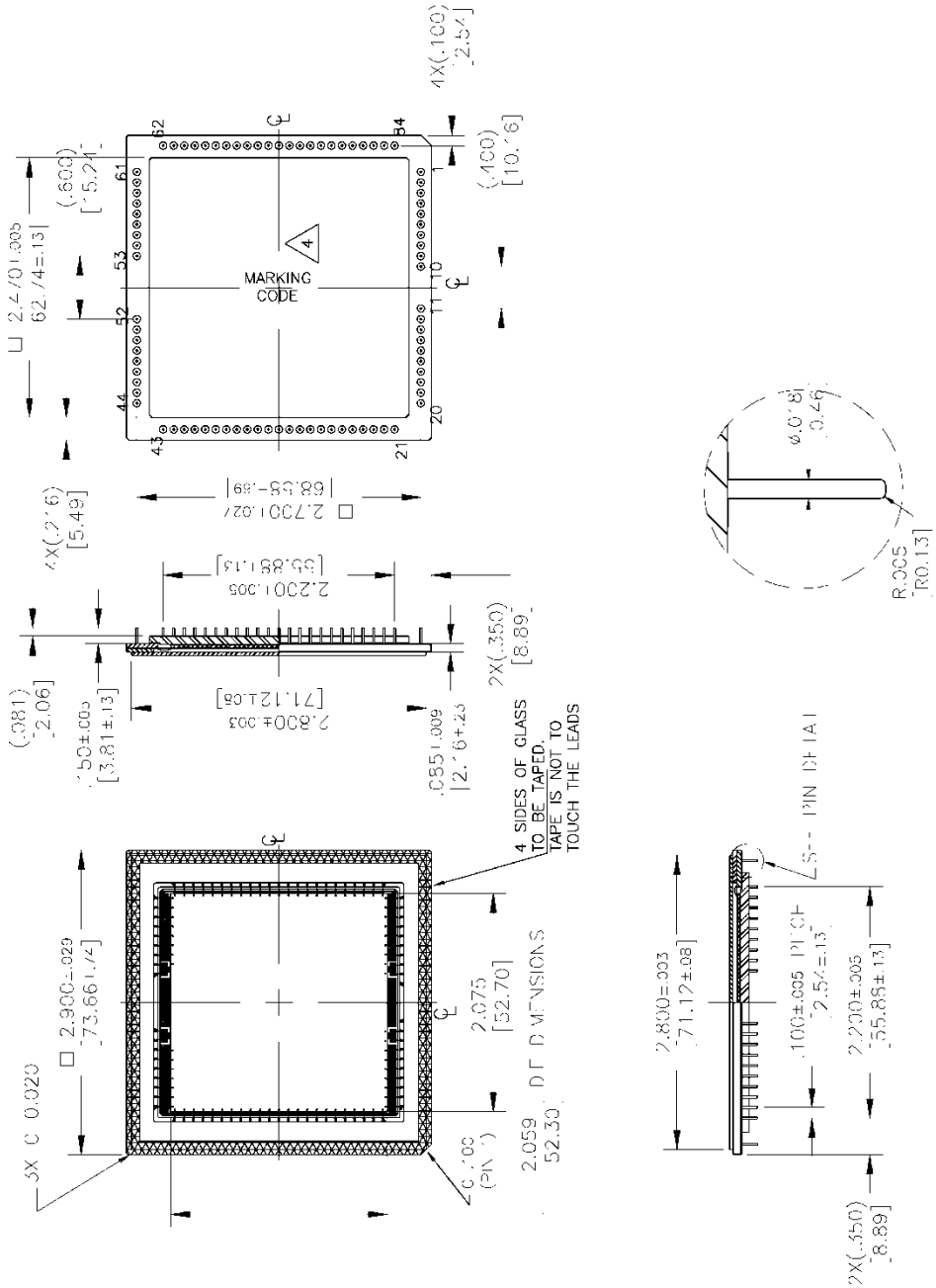

Figure 21. Completed Assembly (1 of 2)

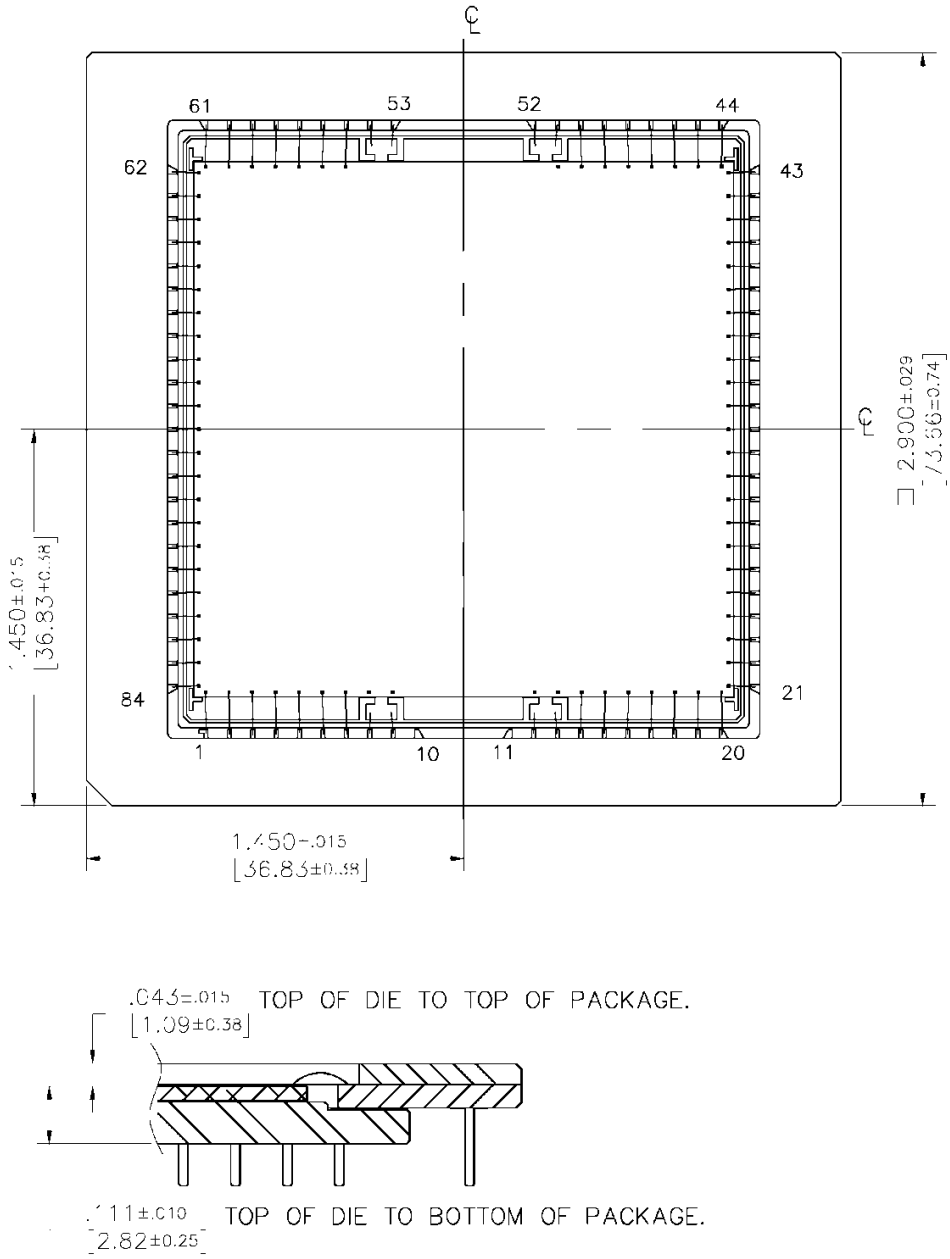

Figure 22. Completed Assembly (2 of 2)

PUBLICATION ORDERING INFORMATION

LITERATURE FULFILLMENT:
Literature Distribution Center for ON Semiconductor
P.O. Box 5163, Denver, Colorado 80217 USA
Phone: 303−675−2175 or 800−344−3860 Toll Free USA/Canada
Fax: 303−675−2176 or 800−344−3867 Toll Free USA/Canada
Email: orderlit@onsemi.com

N. American Technical Support: 800−282−9855 Toll Free USA/Canada
Europe, Middle East and Africa Technical Support:
Phone: 421 33 790 2910
Japan Customer Focus Center
Phone: 81−3−5817−1050

ON Semiconductor Website: **www.onsemi.com**

Order Literature: http://www.onsemi.com/orderlit

For additional information, please contact your local Sales Representative